SLABS PLAN (13.5x4.5m)

DPTO. TÉCNICO AWS

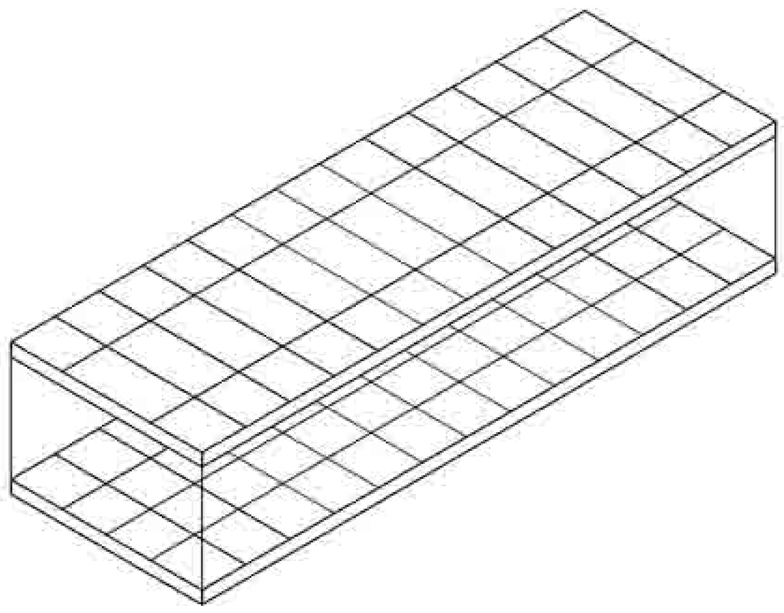

ORIGINAL
e: 30cm

MODIFIED
(AW modulation)

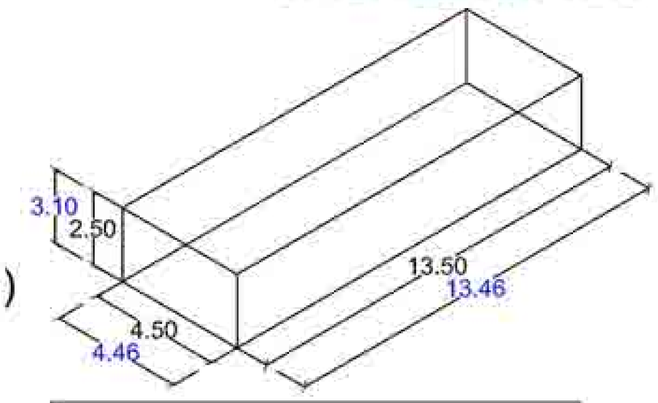

Elevat.	Plan Sect.	Element Description
		AllWall Rib AW-COS.10/Z-220
		AllWall Rib AW-COS.10/Z-240

ROOF SLAB PLAN:

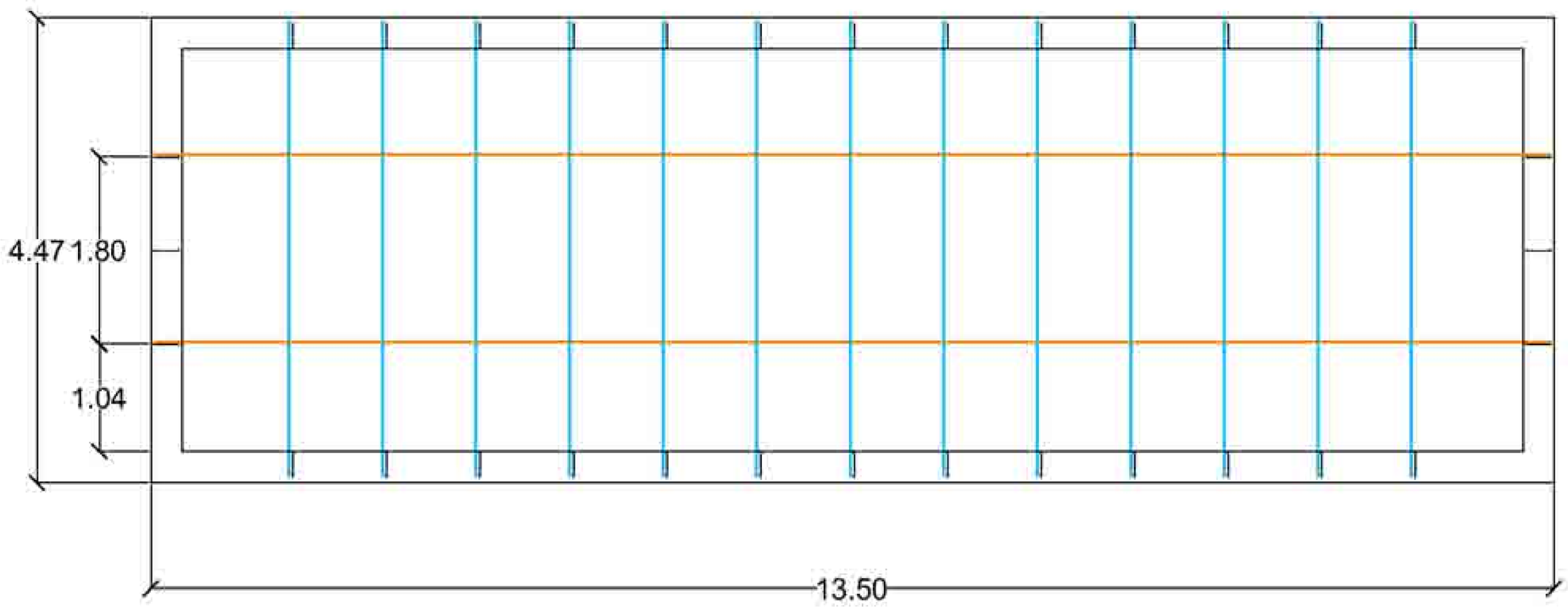

COS.240 each 90cm
COS.220 each 180cm

GROUND FLOOR SLAB PLAN:

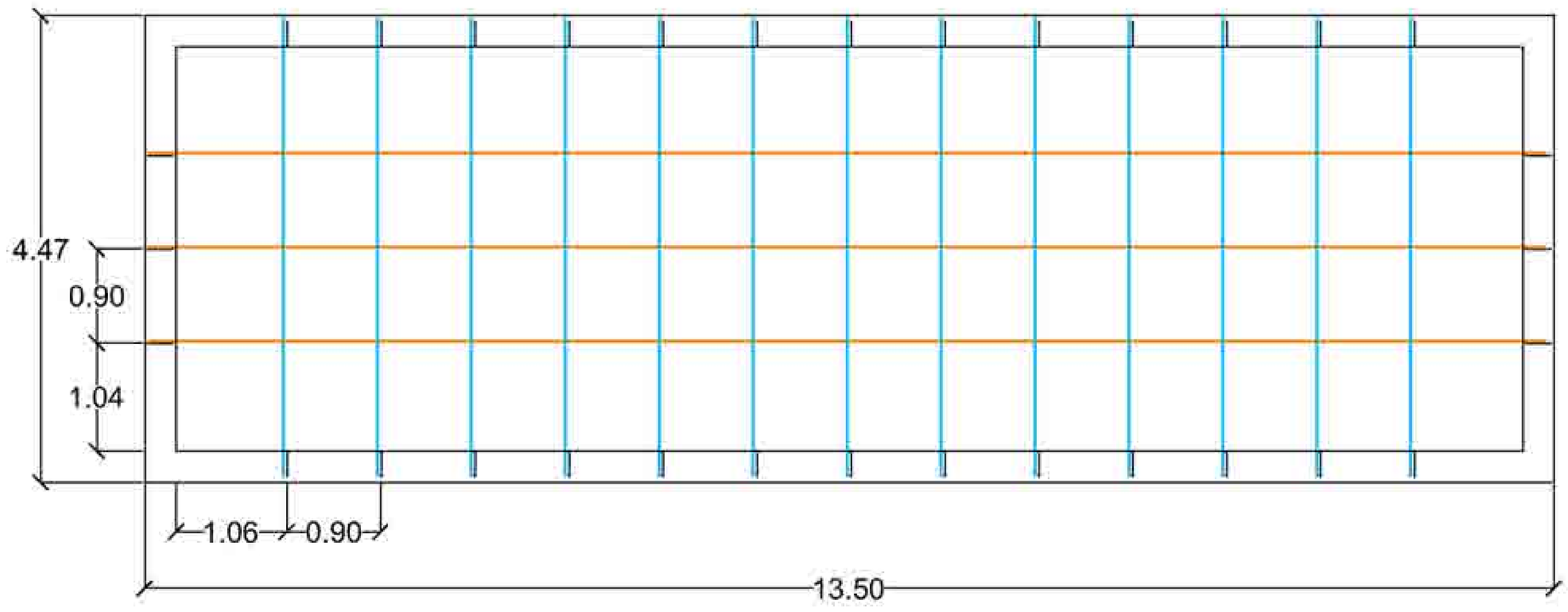

COS.240 each 90cm
COS.220 each 90cm

WALLS ELEVATIONS (13.5x4.5m)

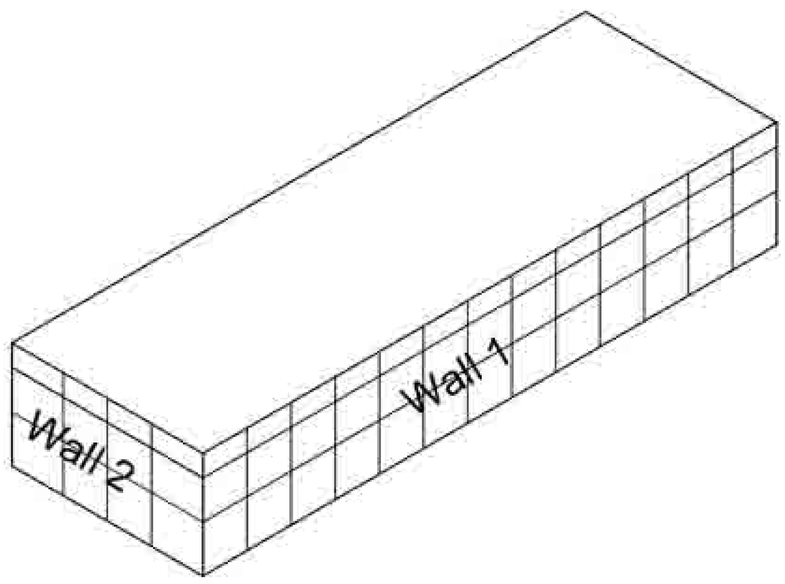

Elevat.	Plan Sect.	Element Description
		AllWall Rib AW-COS.10/Z-220
		AllWall Rib AW-COS.10/Z-240

ELEVATION **1**: 13.5 x 3.10 m

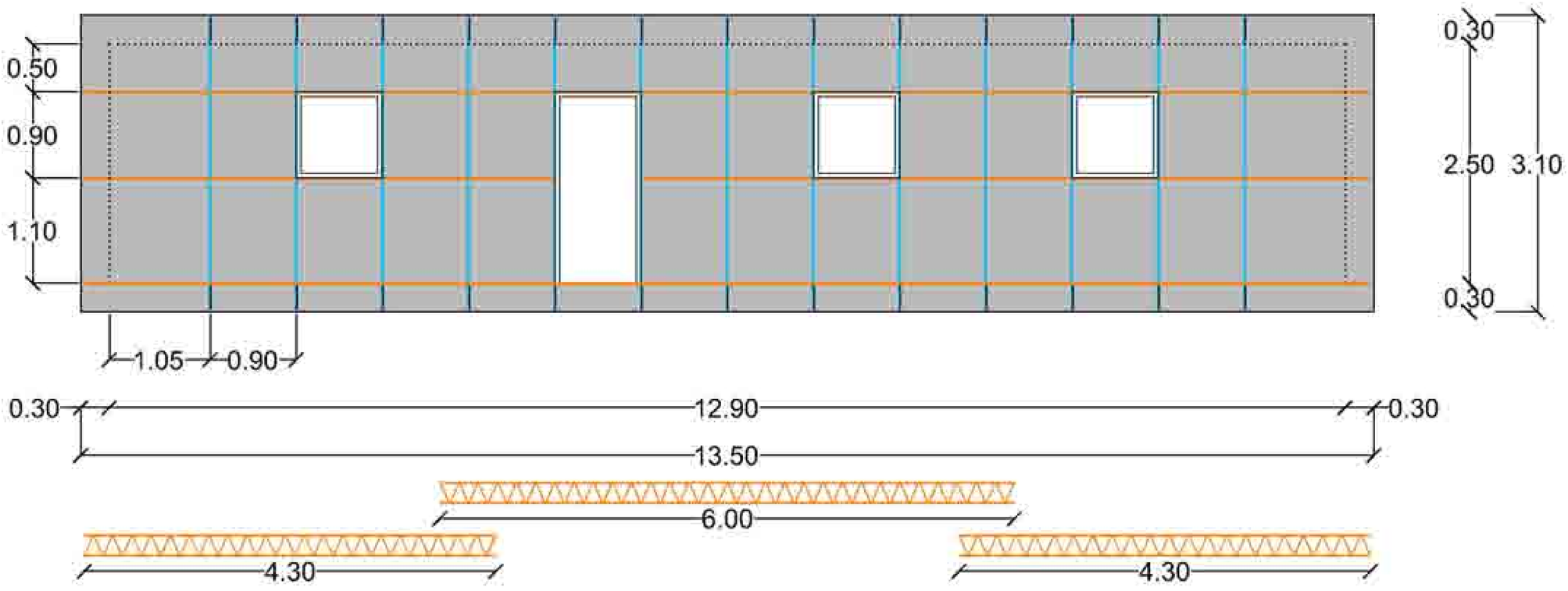

ELEVATION **1** (option 2): 13.5 x 3.10 m

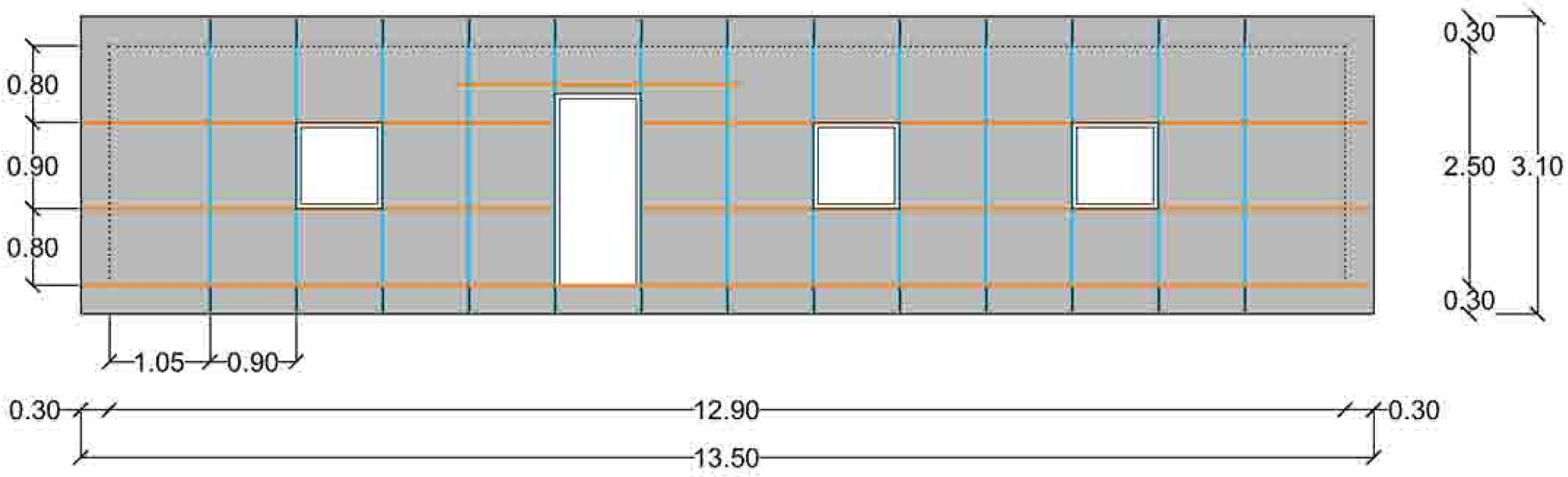

ELEVATION **2**: 13.5 x 3.10 m

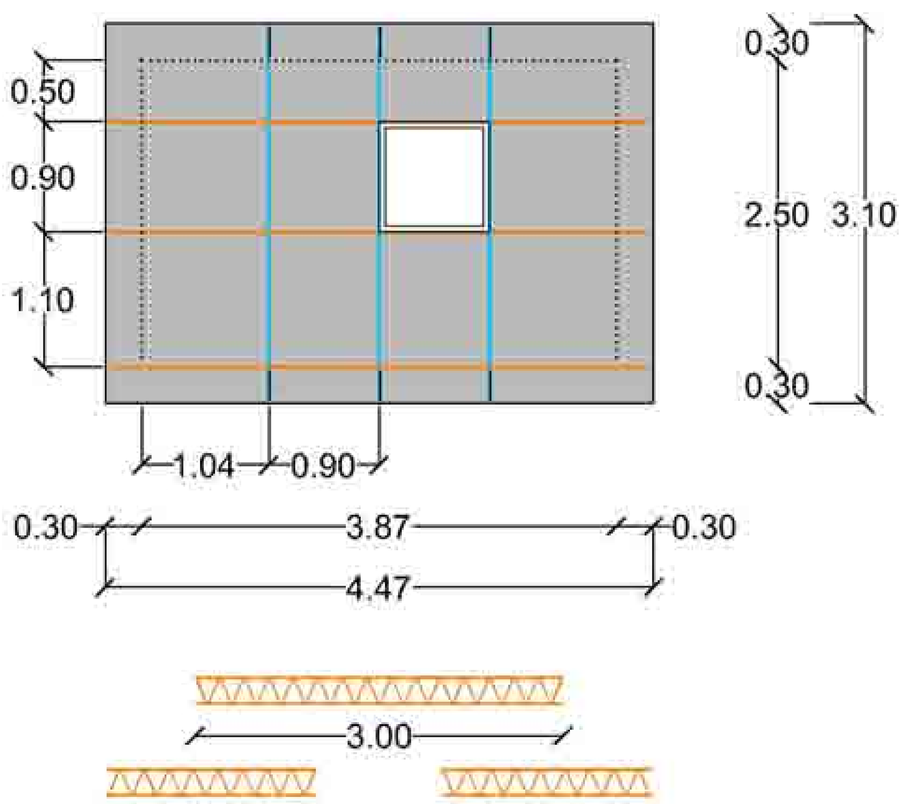

ELEVATION **2** (option 2): 13.5 x 3.10 m

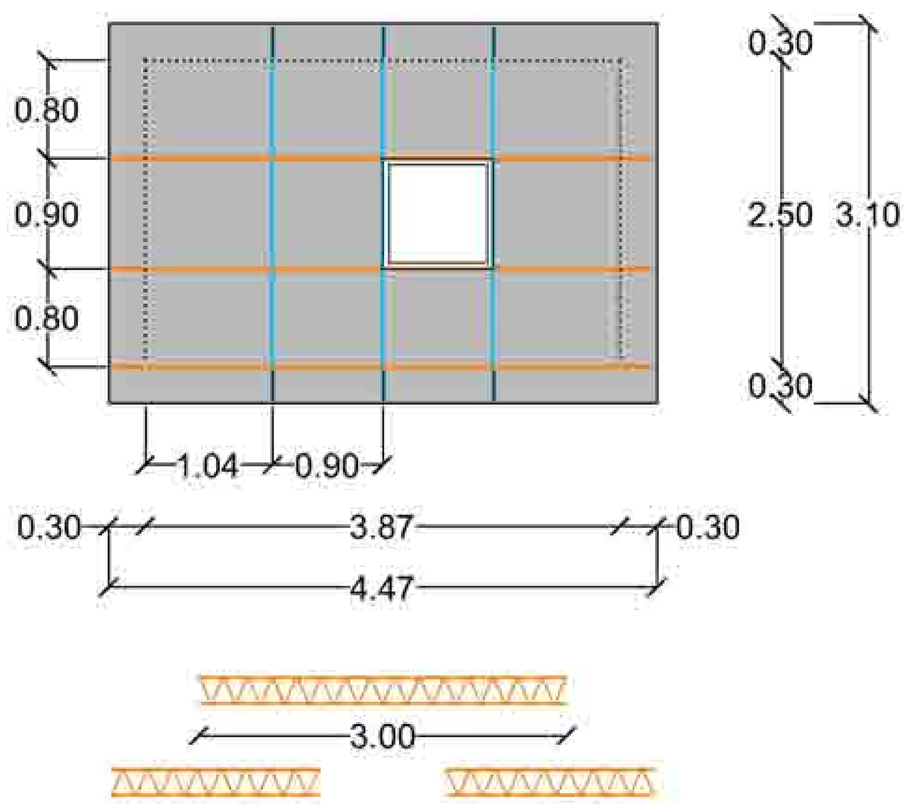

WALL MODULATION PLAN (e = 30 cm)

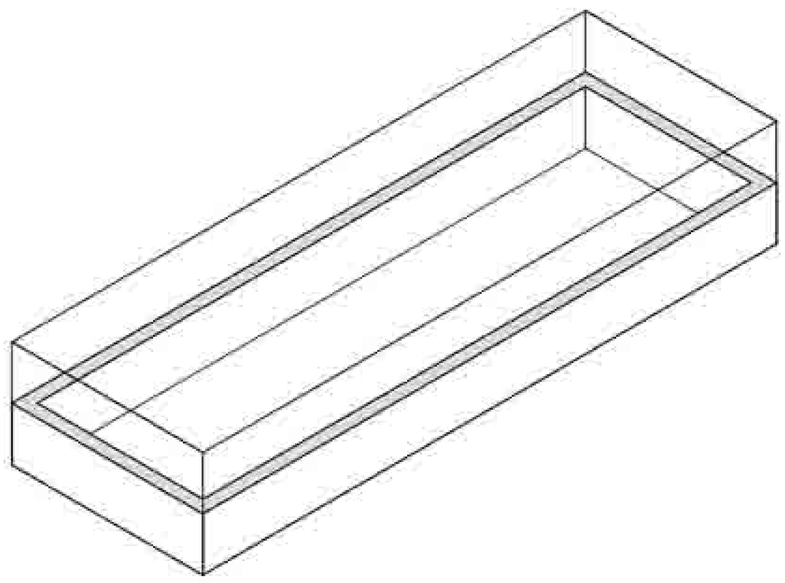

Elevat.	Plan Sect.	Element Description
		AllWall Rib AW-COS.10/Z-220
		AllWall Rib AW-COS.10/Z-240

Vertical structure: COS.240 each 90cm
Horizontal structure: COS.220 each 90cm.

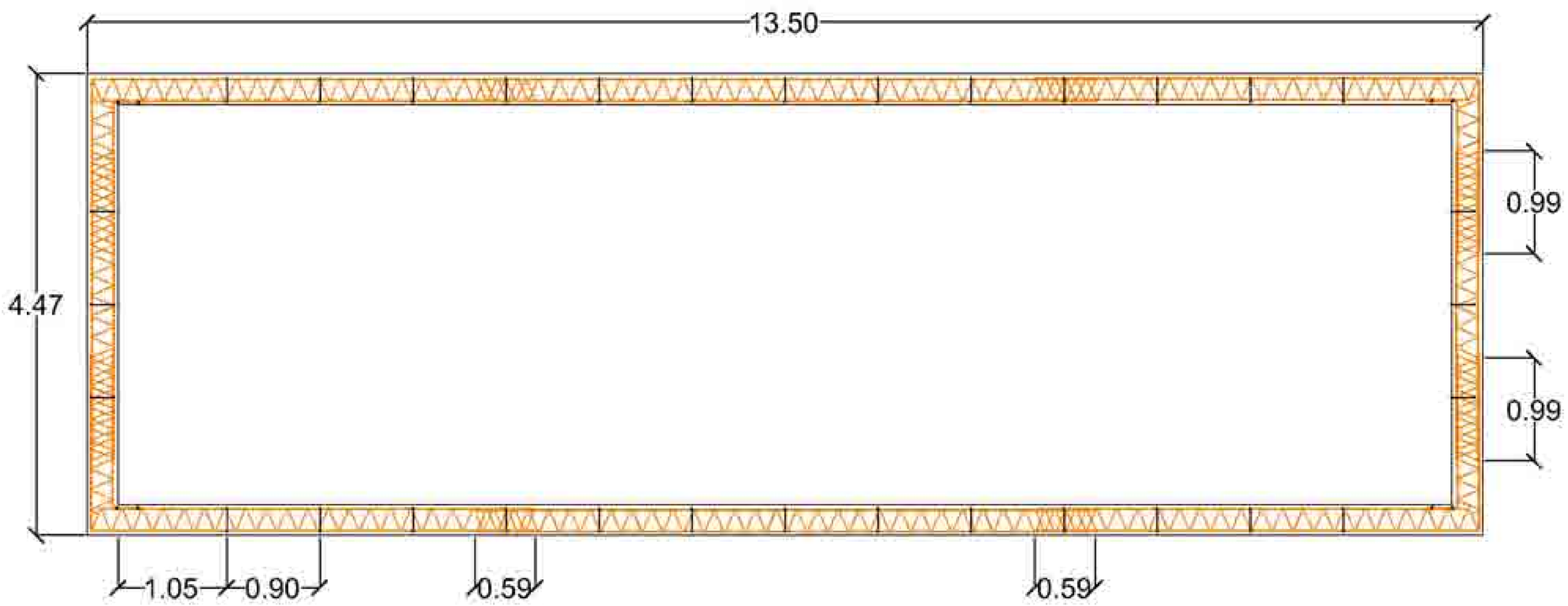

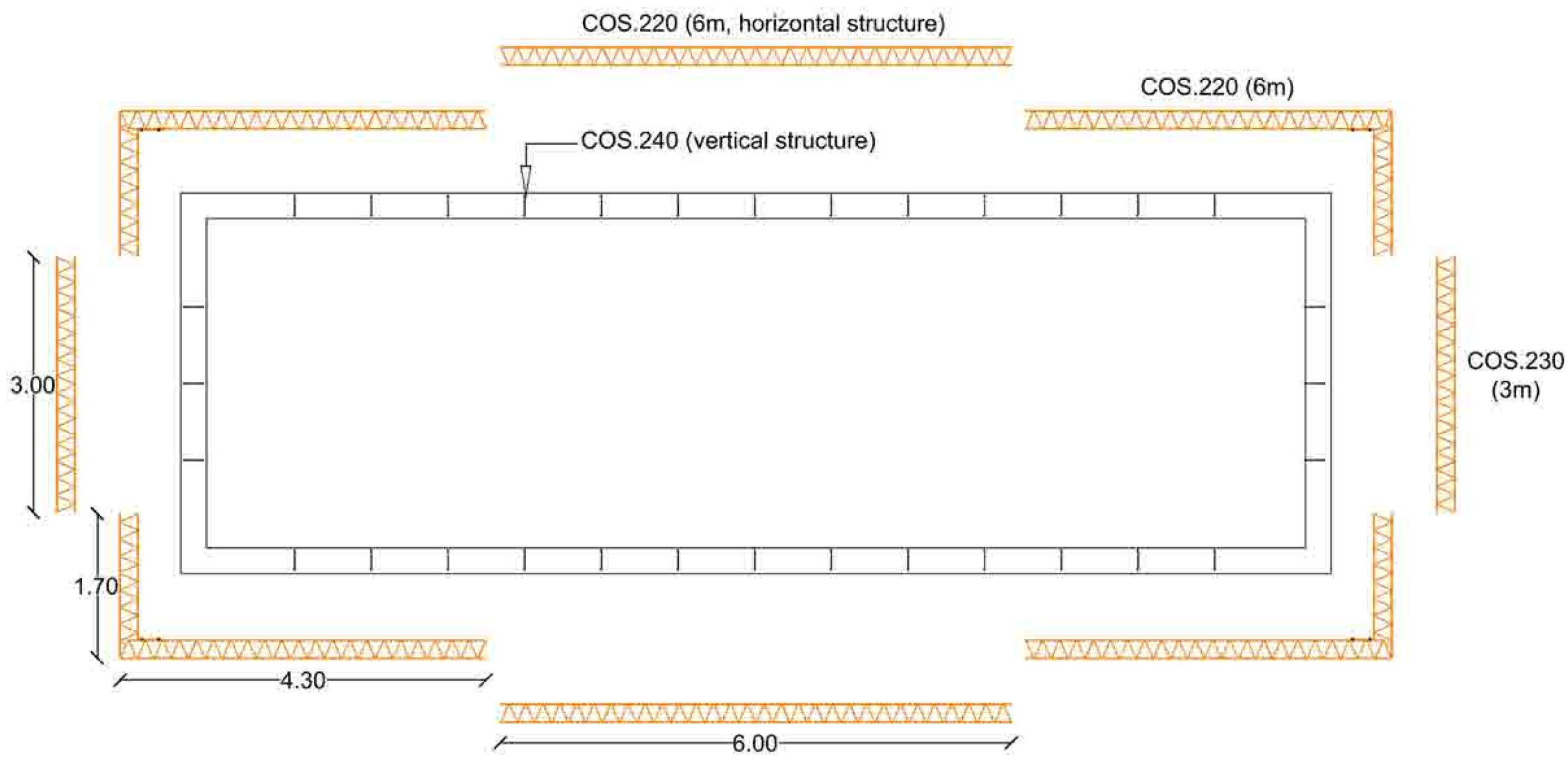

WALL SECTION (4.50 x 3.10m)

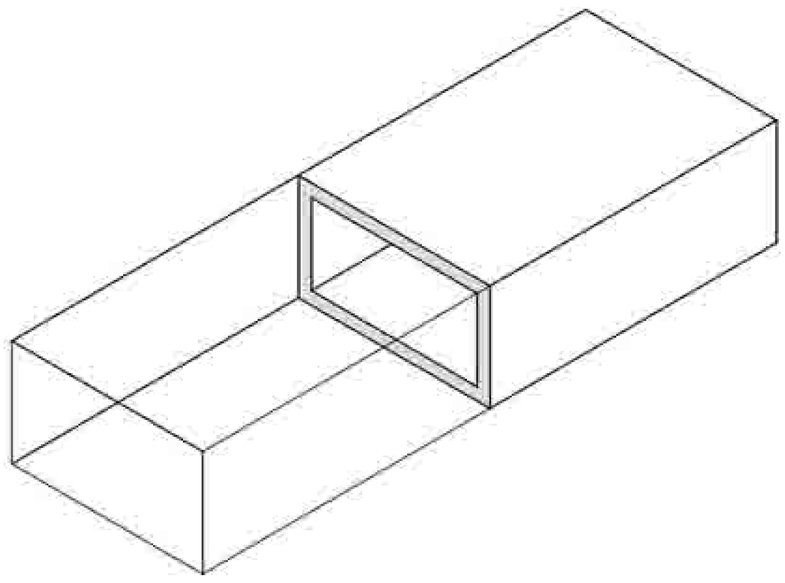

Elevat.	Plan Sect.	Element Description
		AllWall Rib AW-COS.10/Z-220
		AllWall Rib AW-COS.10/Z-240

COS.240 each 90cm (Short porch, main structure)
COS.220 each 90cm (Long porch, secondary structure)

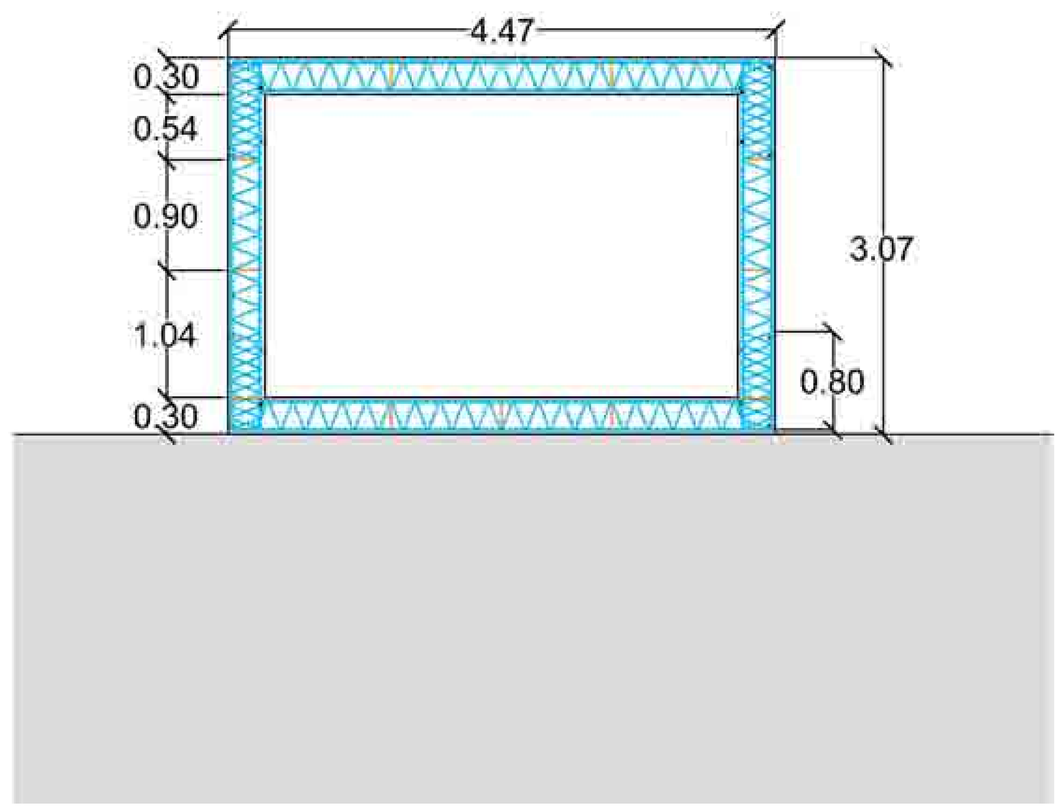

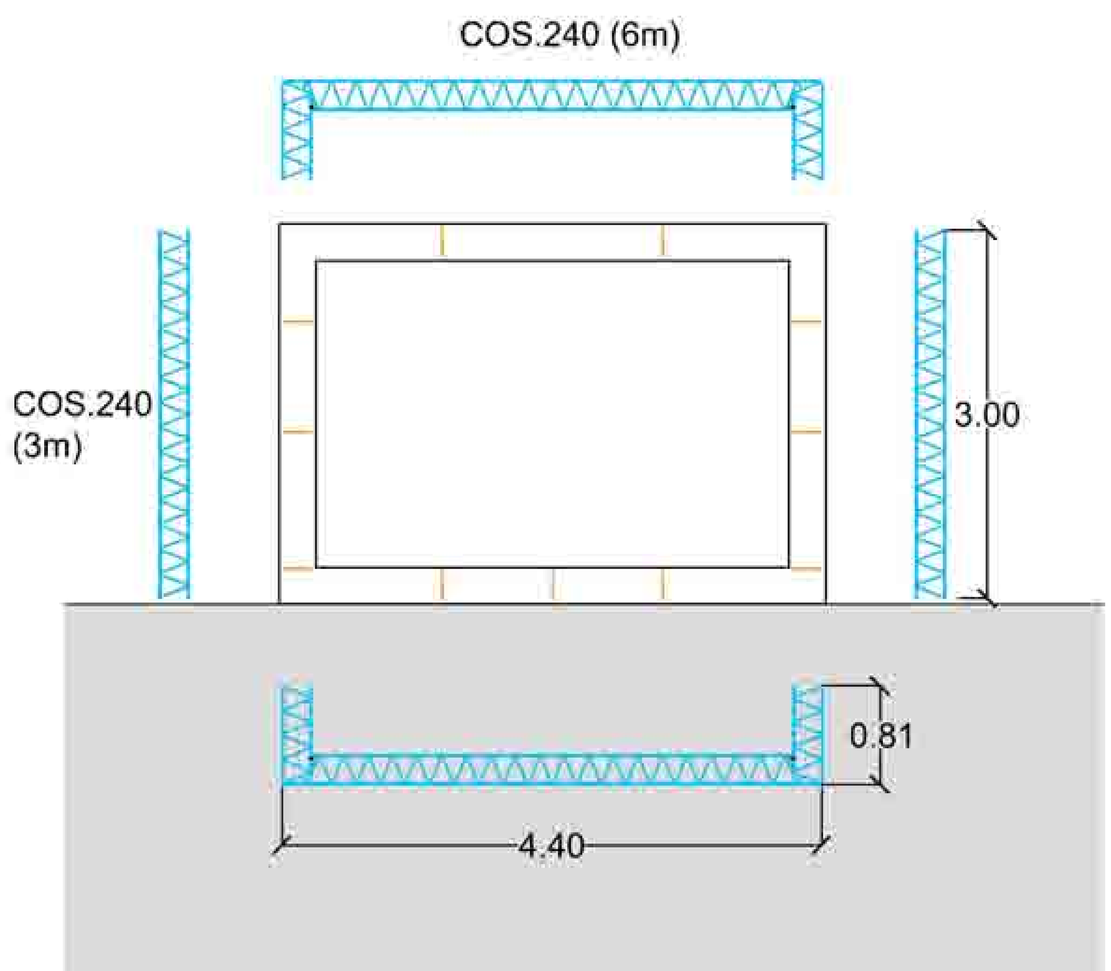

WALL SECTION (13.50 x 3.10m)

DPTO. TÉCNICO AWS

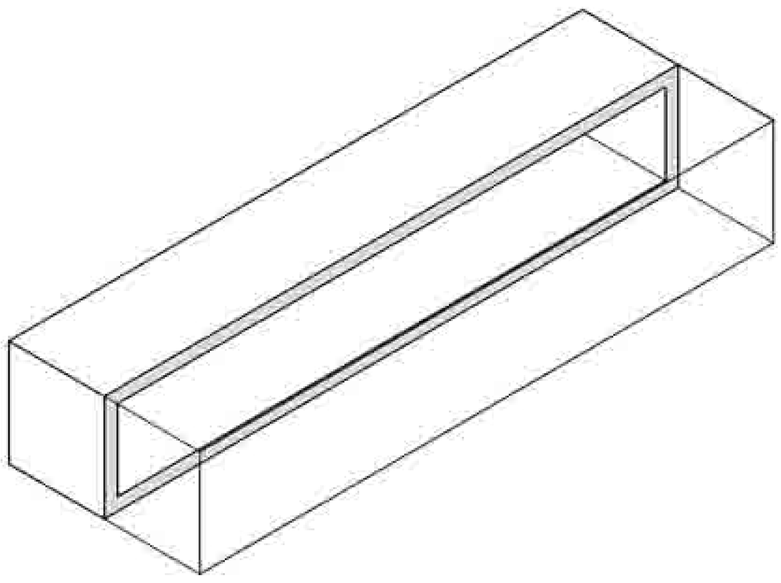

Elevat.	Plan Sect.	Element Description
		AllWall Rib AW-COS.10/Z-220
		AllWall Rib AW-COS.10/Z-240

COS.240 each 90cm (vertical structure)
COS.220 each 90cm (horizontal structure)

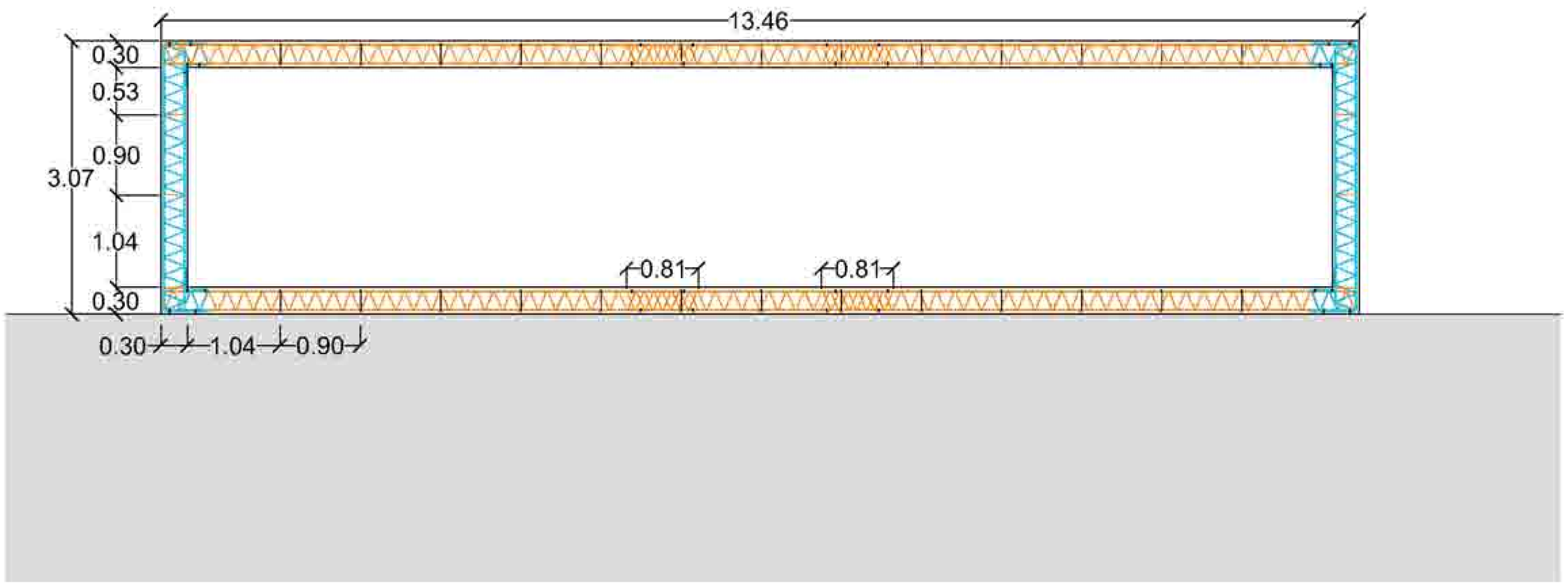

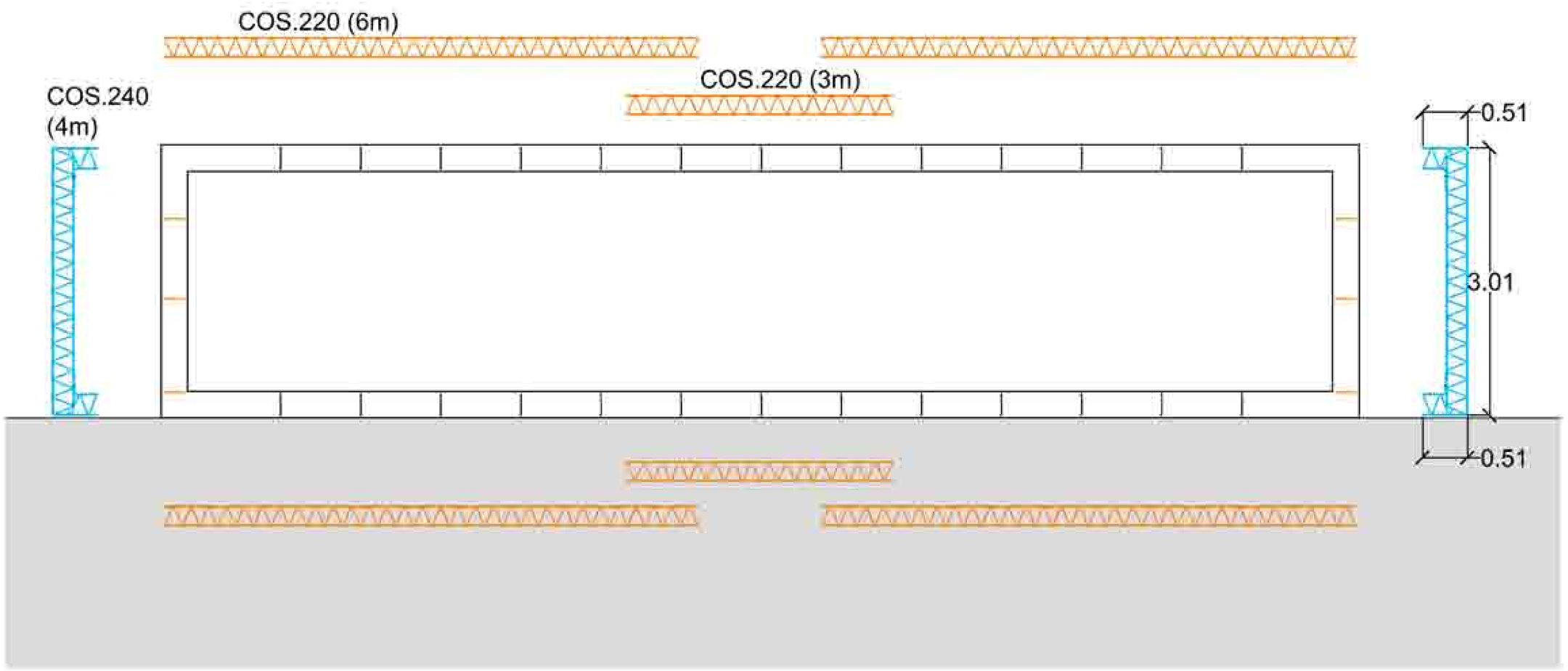

ALLWALL SYSTEMS S.L. Exclusive commercializer of the ALLWALL construction system.
C/ General Perón 3. 28020 Madrid. Tel: 91-556 81 93 E-mail: awsystems@telefonica.net

WALL- ROOF SLAB JOINT DETAIL: SHORT PORCH

DPTO. TÉCNICO AWS

TWO EQUAL RIBS:
COS.240 next to COS.240

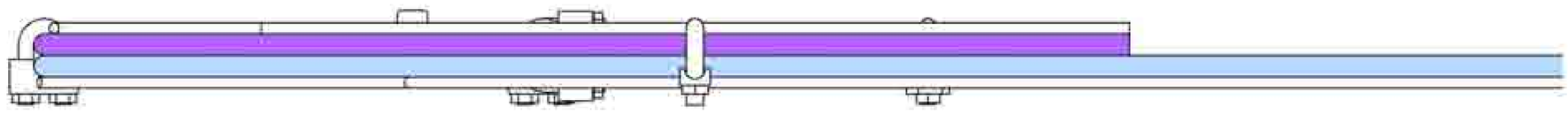

Joint plan
2 COS.240

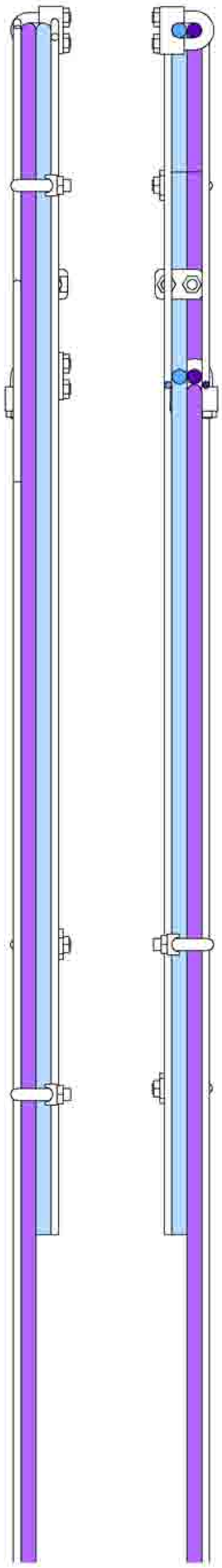

Lateral elevation

A-A'
Section

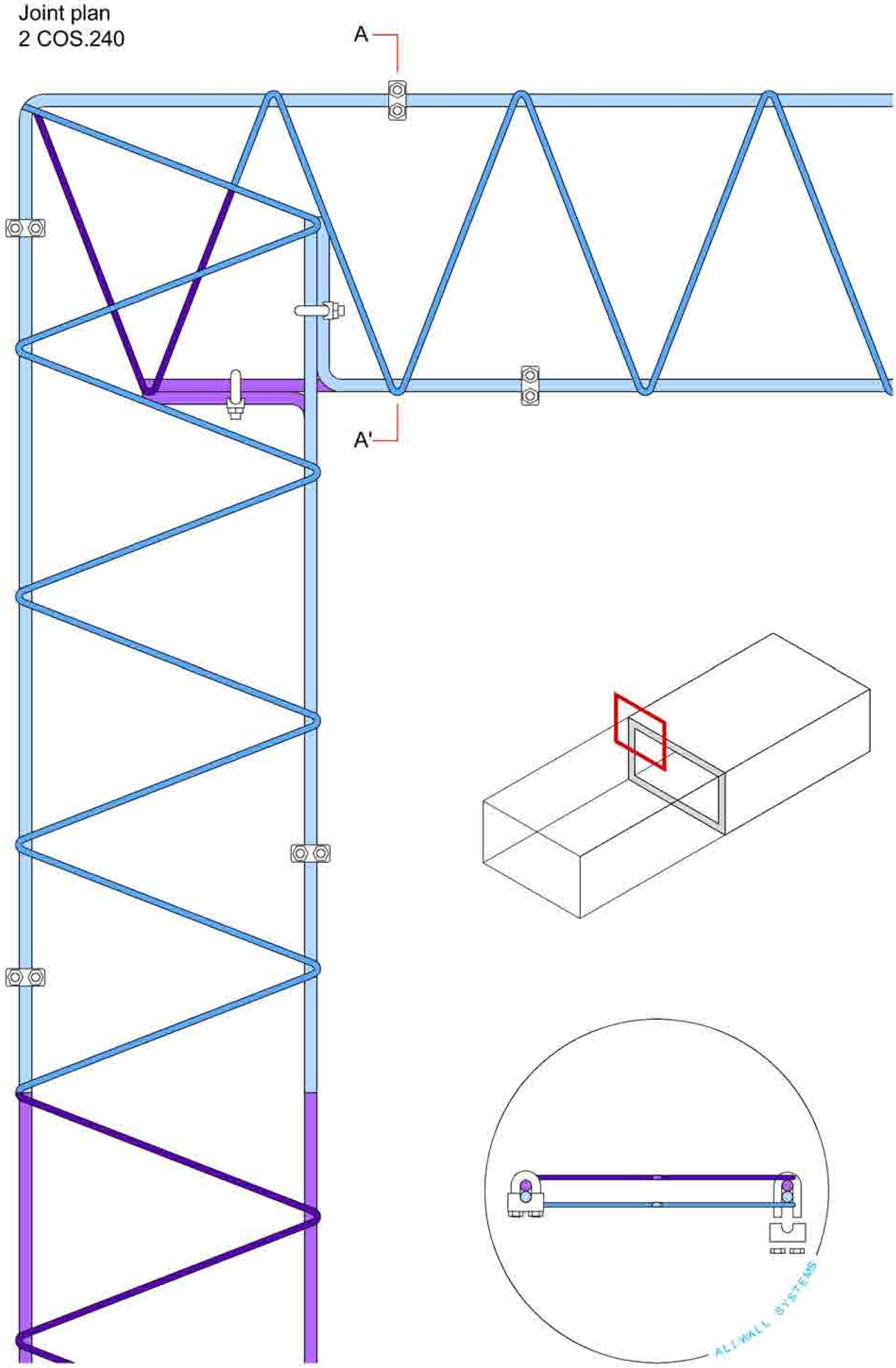

Front elevation

Two Costilla overlapped
with 4 AW-Pres.inox.

AWS ALLWALL® SYSTEMS
ALLWALL SYSTEMS S.L. Exclusive commercializer of the ALLWALL construction system.
C/ General Perón 3. 28020 Madrid. Tel: 91-556 81 93 E-mail: awsystems@telefonica.net

WALL- ROOF SLAB JOINT DETAIL: SHORT PORCH

DPTO. TÉCNICO AWS

TWO EQUAL RIBS:
COS.240 next to COS.240

		AllWall Rib AW-COS.10/Z-240

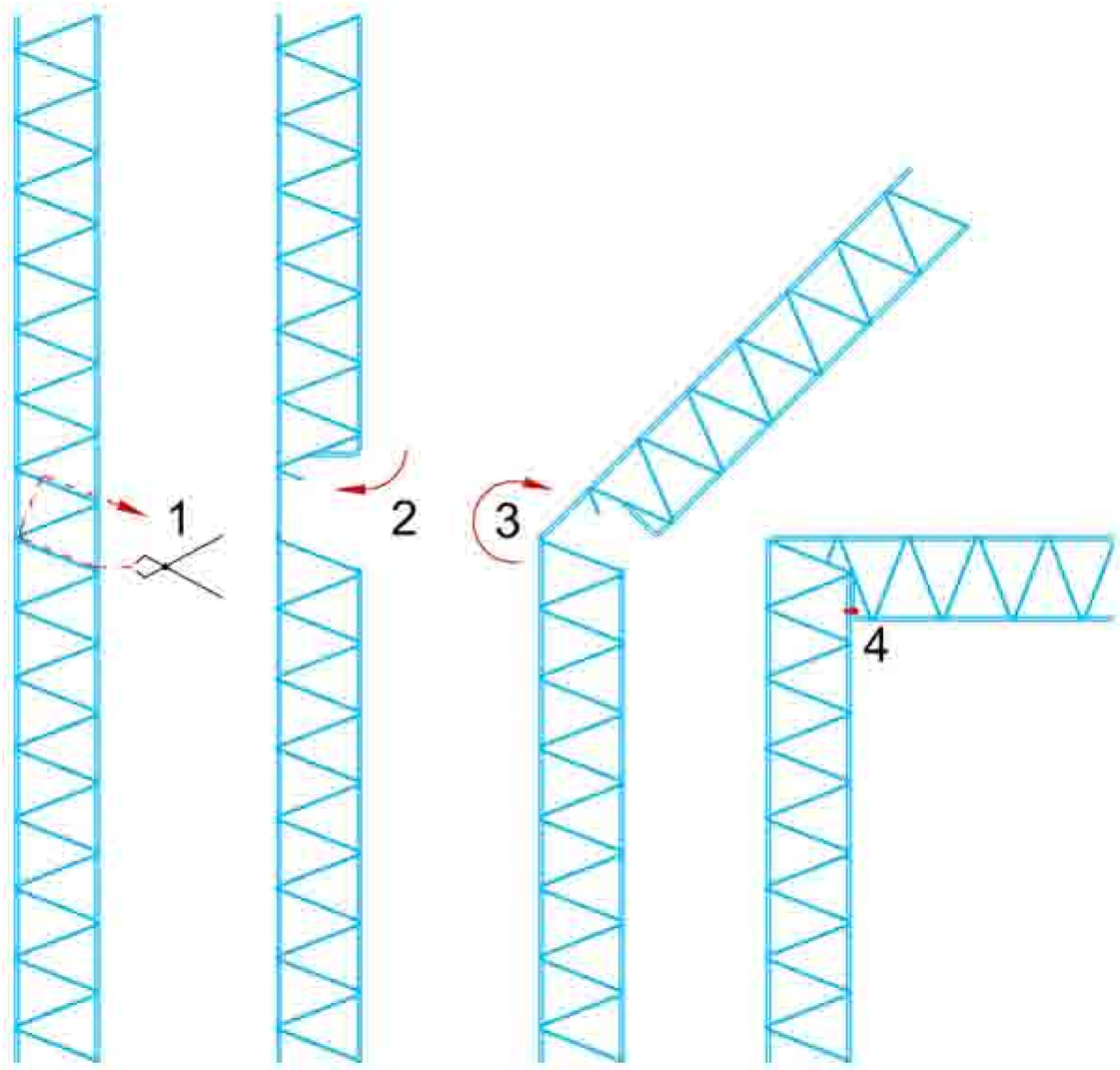

Costilla: bending diagram

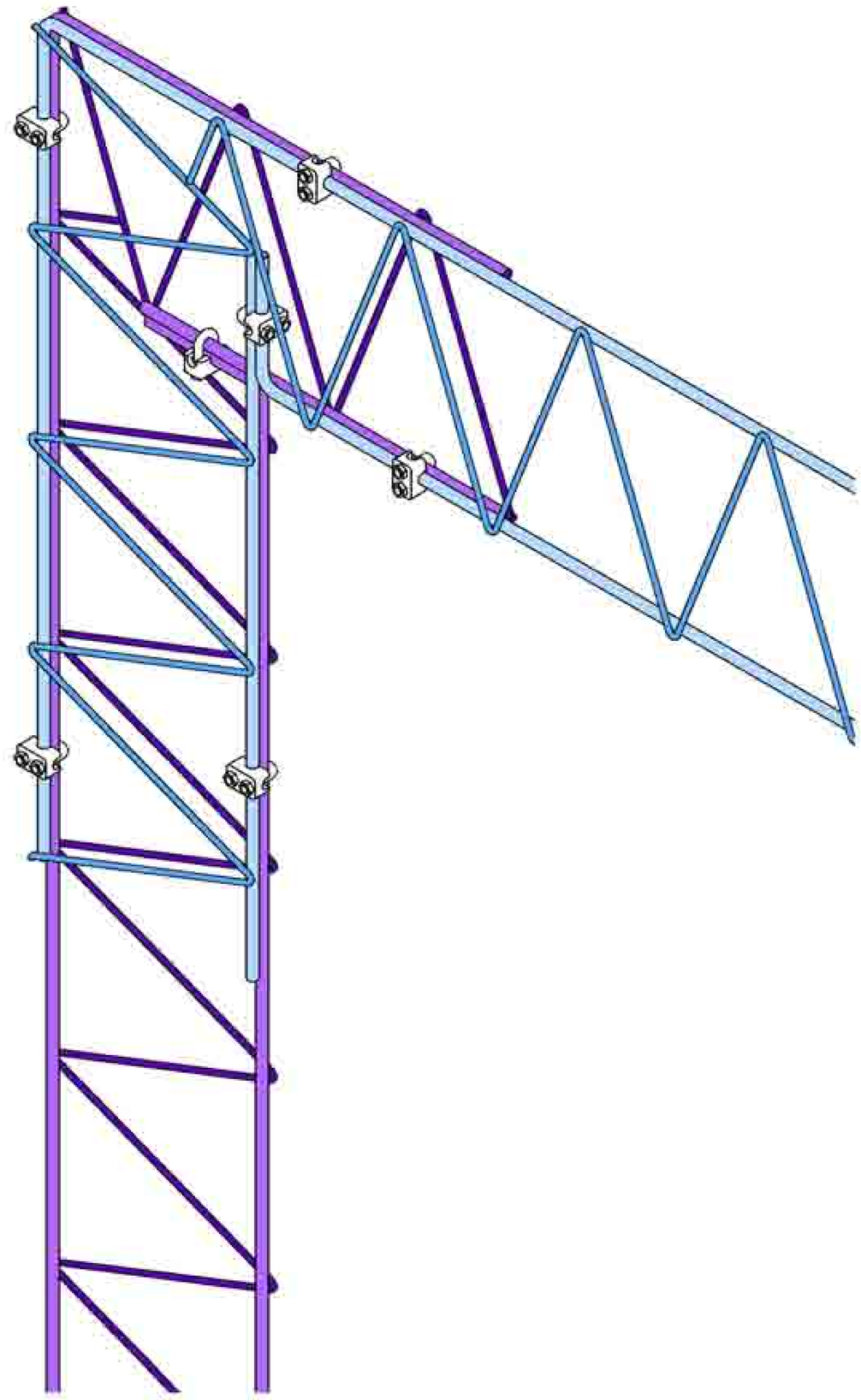

Axonometric view of the joint.
2 COS.240

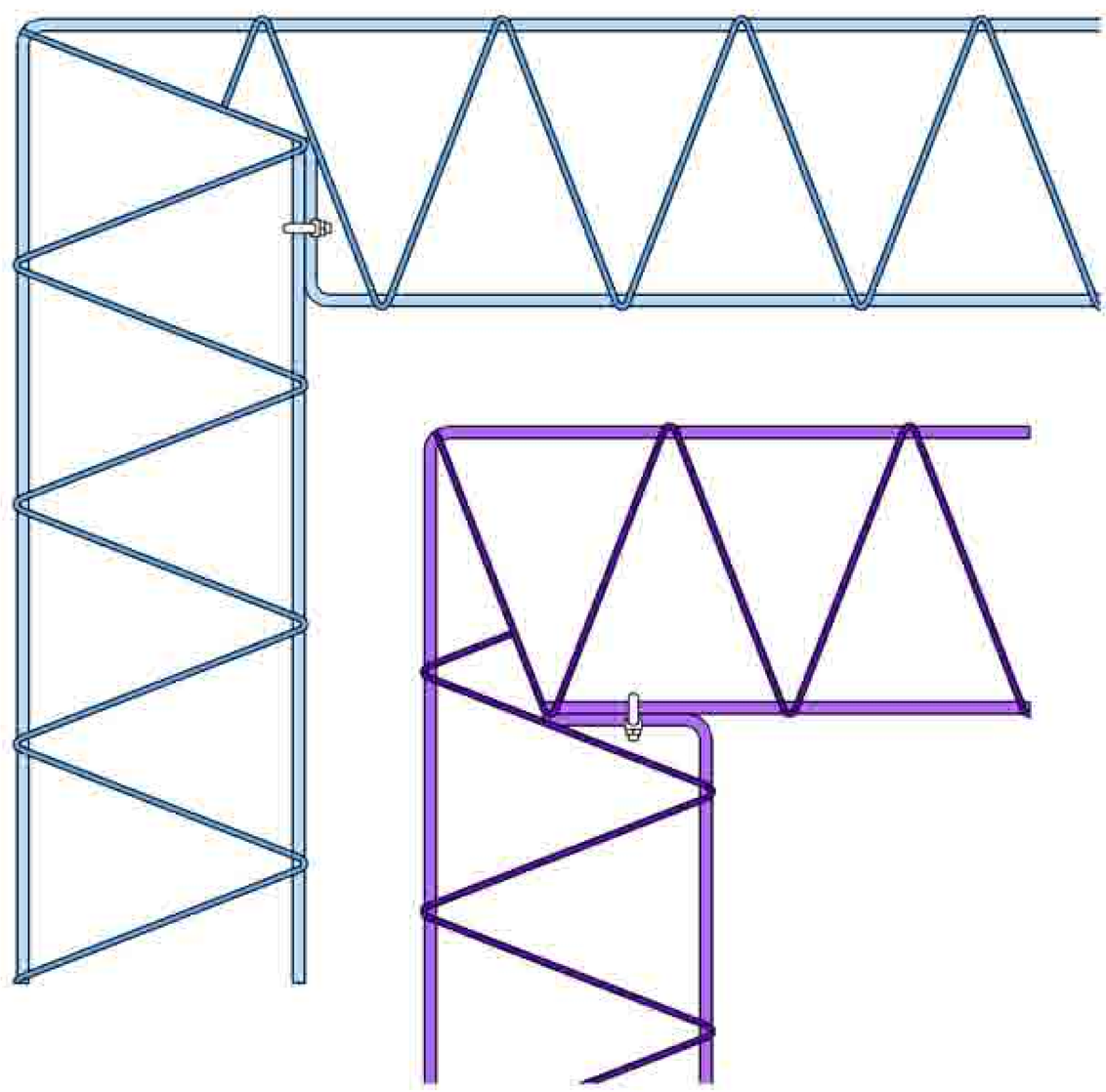

Wall Costilla & Slab Costilla bending detail.

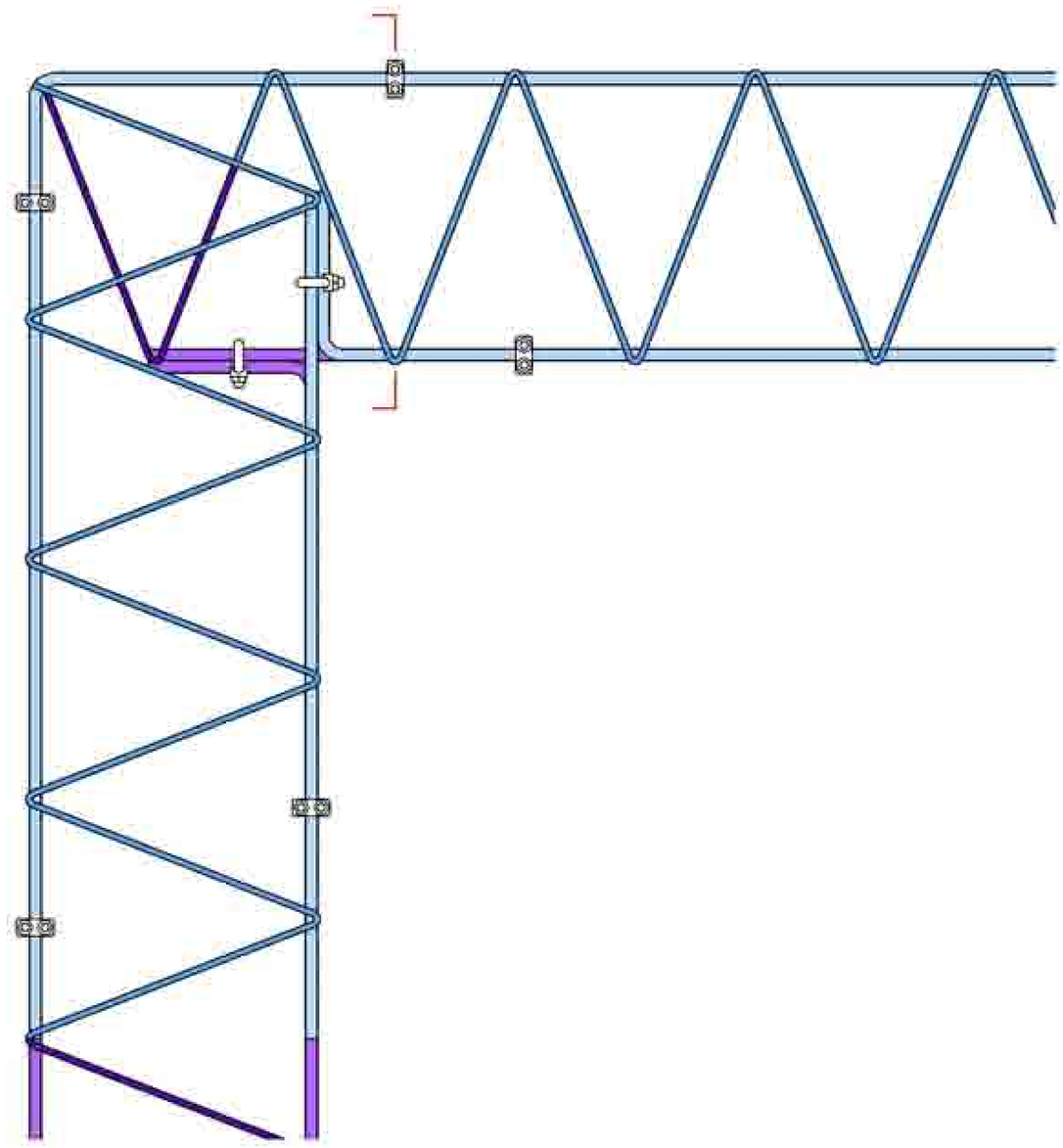

Frontal elevation of the entire joint

ALLWALL SYSTEMS®
ALLWALL SYSTEMS S.L. Exclusive commercializer of the ALLWALL construction system.
C/ General Perón 3. 28020 Madrid. Tel: 91-556 81 93 E-mail: awsystems@telefonica.net

WALL- ROOF SLAB JOINT DETAIL: LONG PORCH

DPTO. TÉCNICO AWS

TWO DIFFERENT RIBS:
COS.220 inside COS.240

		AllWall Rib AW-COS.10/Z-220
		AllWall Rib AW-COS.10/Z-240

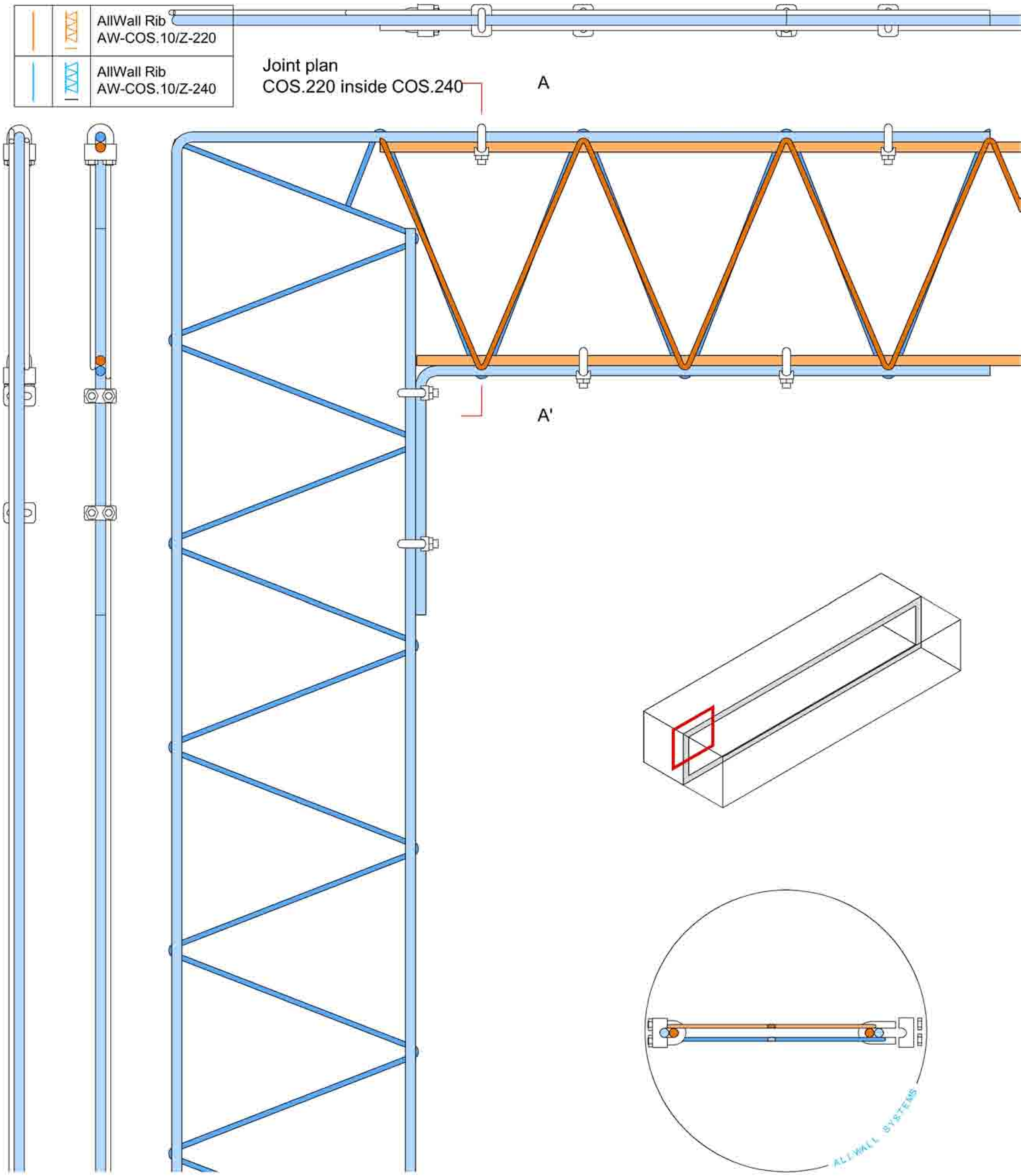

Lateral elevation

A-A' Section

Front elevation

Two Costilla overlapped with 4 AW-Pres.inox.

WALL- ROOF SLAB JOINT DETAIL: LONG PORCH

TWO DIFFERENT RIBS:
COS.220 inside COS.240

		AllWall Rib AW-COS.10/Z-220
		AllWall Rib AW-COS.10/Z-240

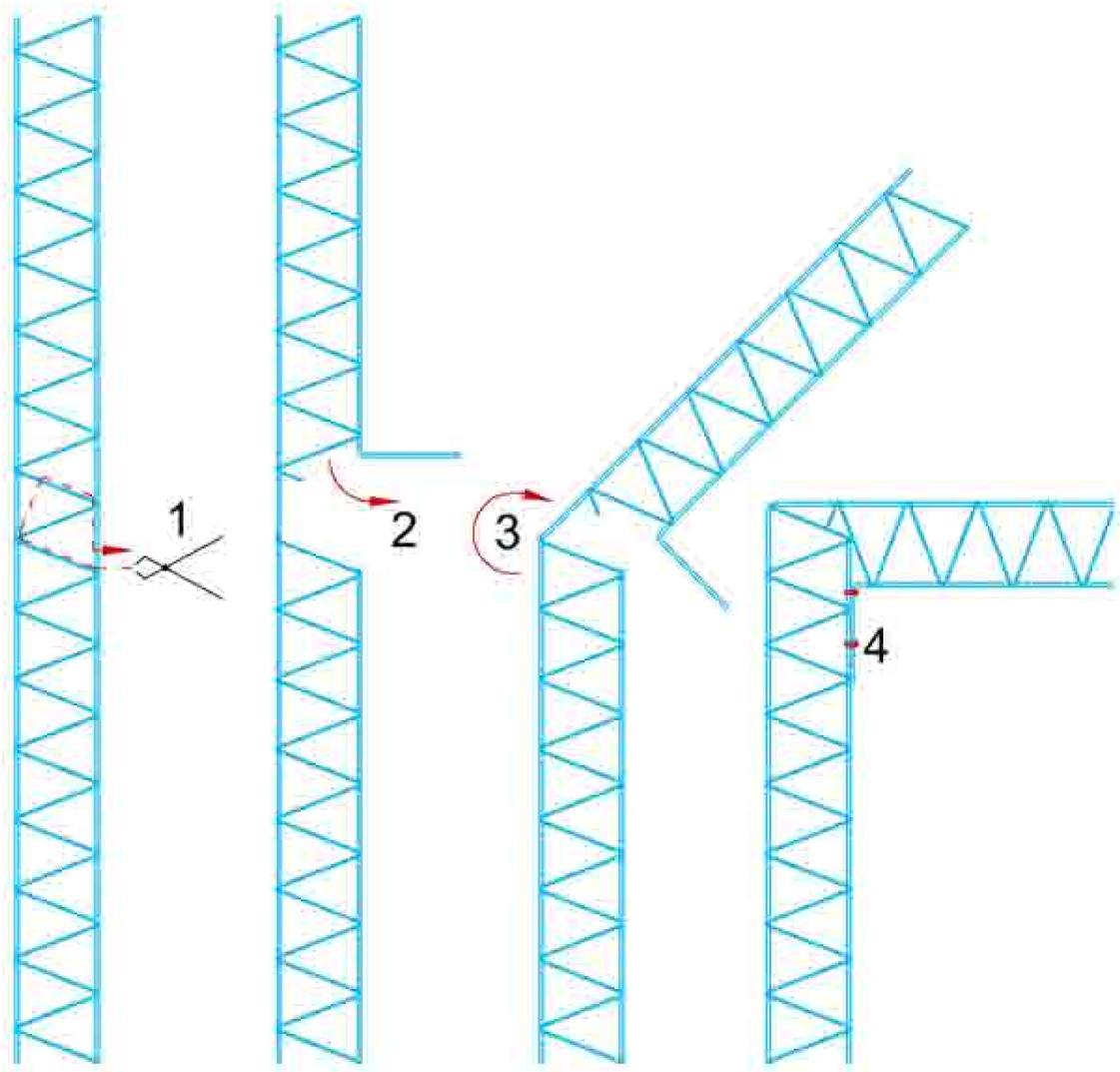

Costilla: bending diagram

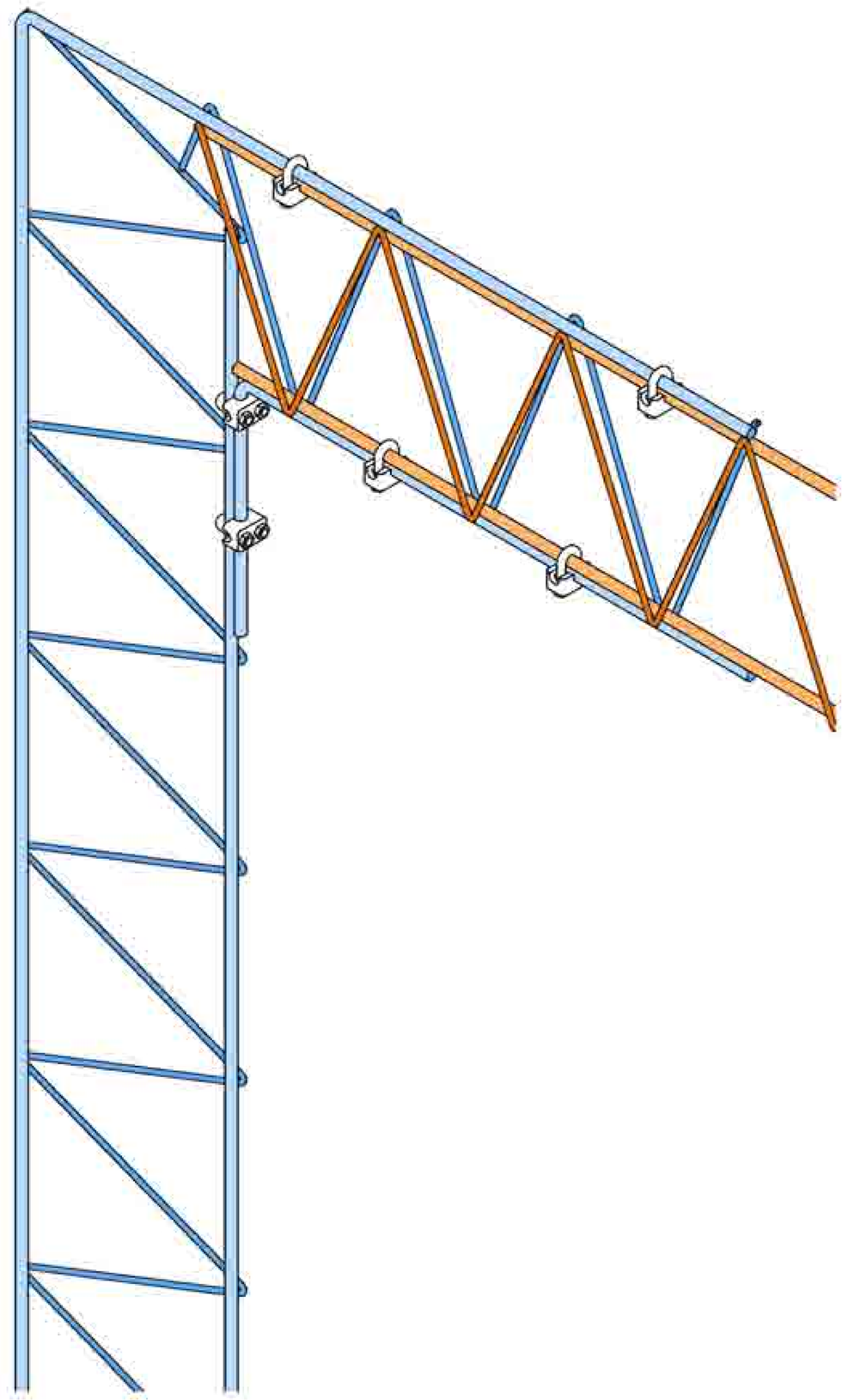

Axonometric view of the joint.
COS.220 inside COS.240

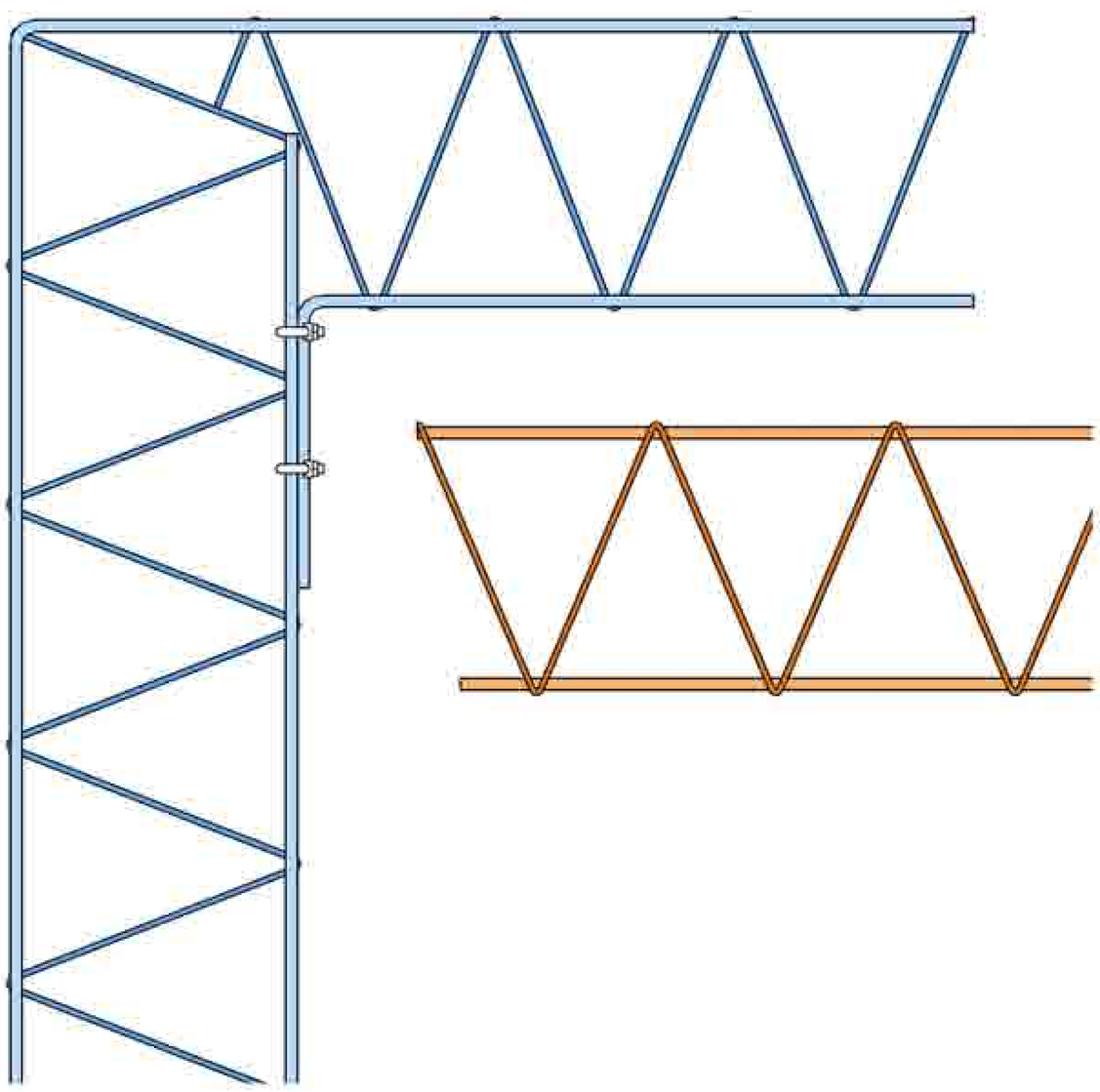

Wall Costilla & Slab Costilla bending detail.

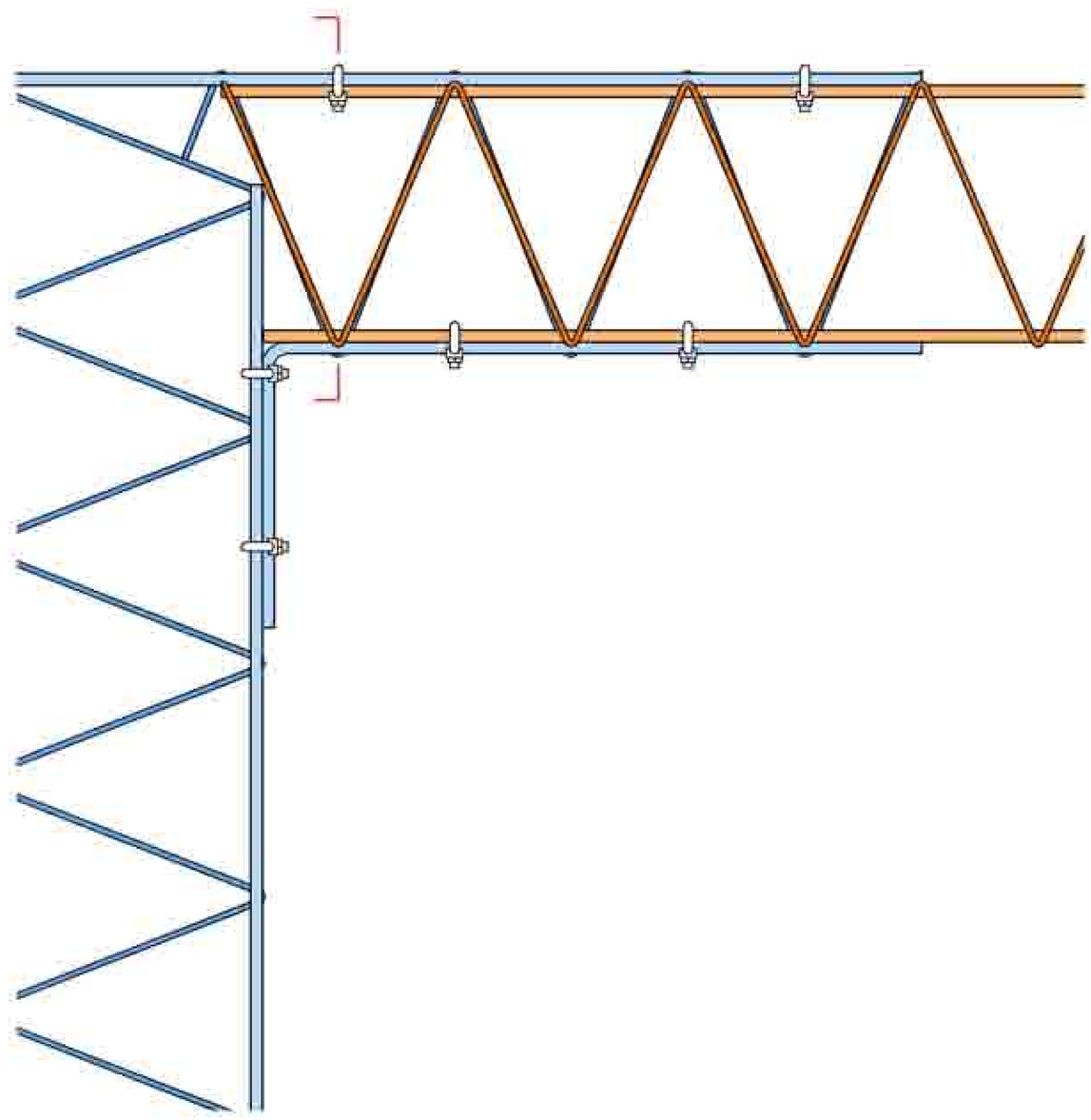

Frontal elevation of the entire joint

ALTERNATIVE MODULAR SHELTERS

DPTO. TÉCNICO AWS

Elevat.	Plan Sect.	Element Description
		AllWall Rib AW-COS.10/Z-220
		AllWall Rib AW-COS.10/Z-240

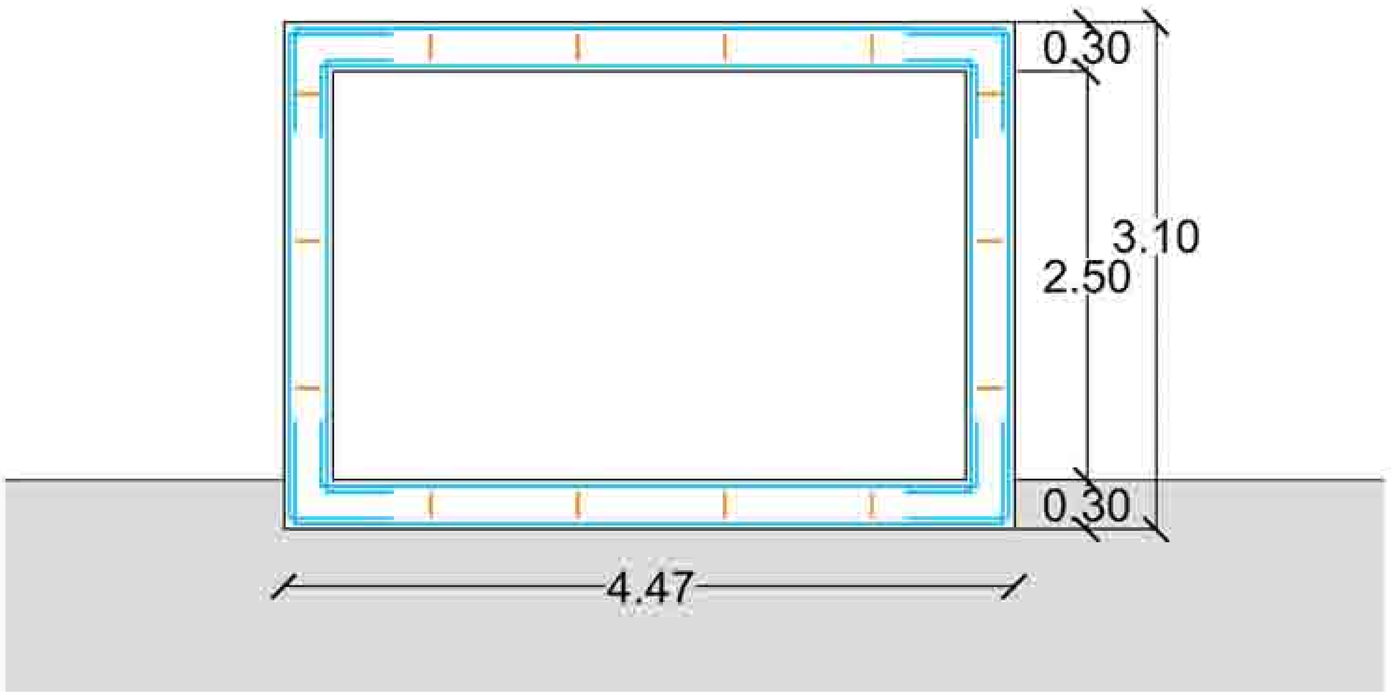

Modular housing 1:
· Box on the ground

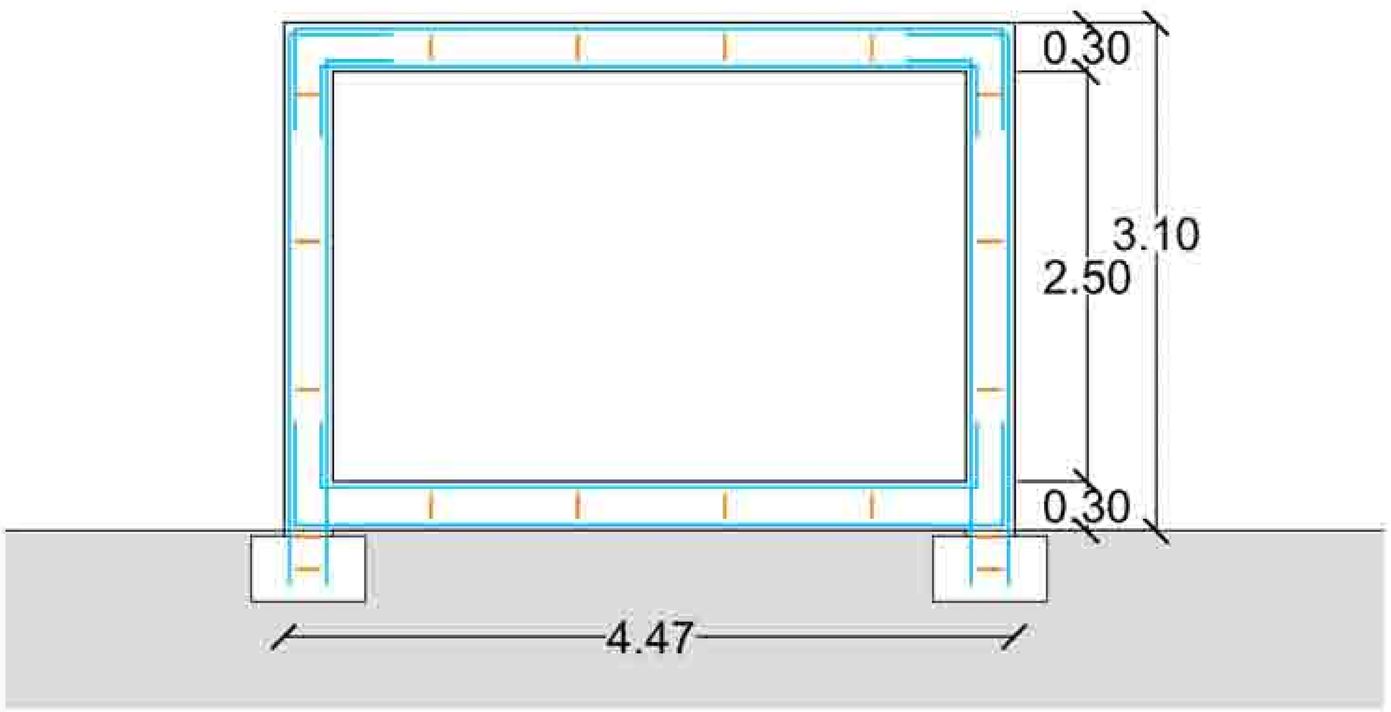

Modular housing 2:
· Strip footing

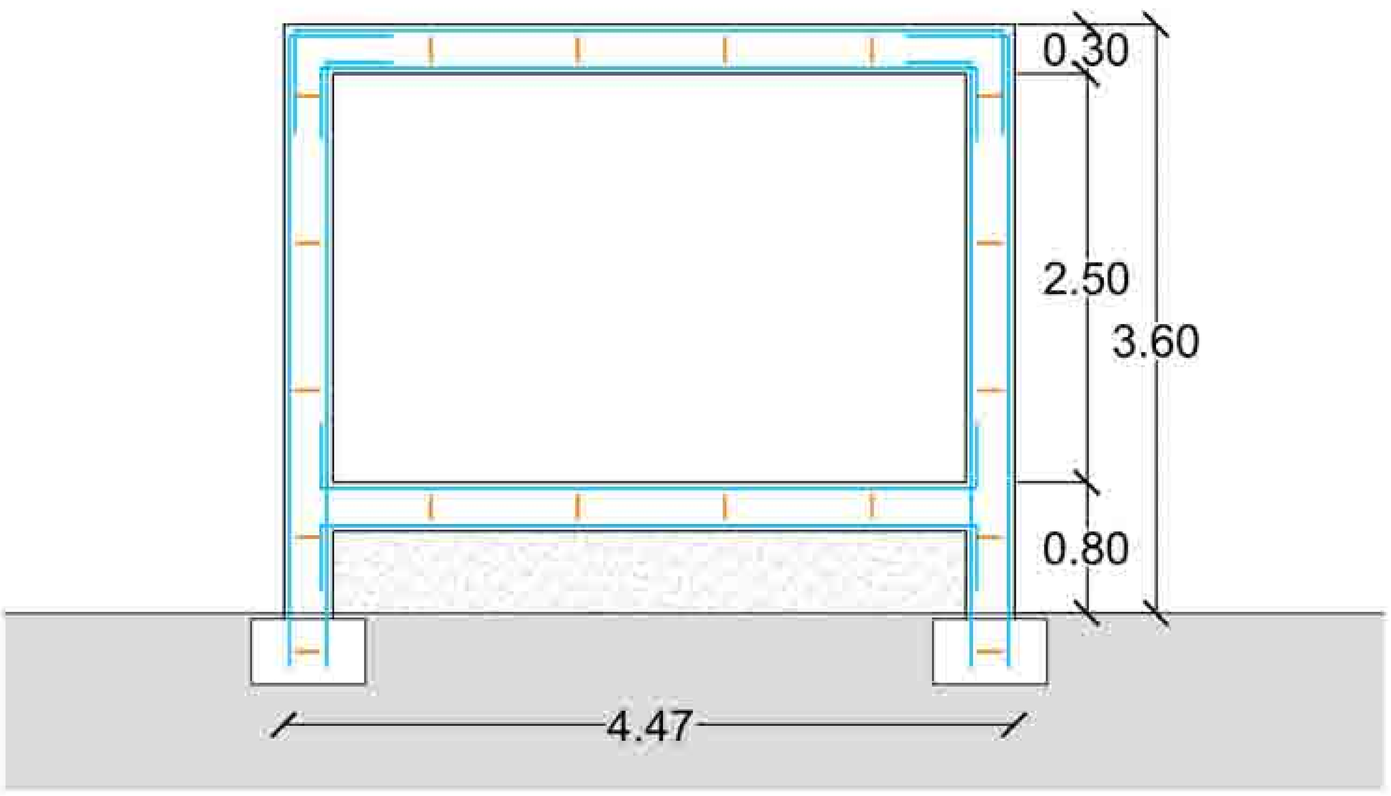

Modular housing 3:
· Strip footing
· Elevated slab (~50cm crawlspace)

ALTERNATIVE MODULAR SHELTERS

DPTO. TÉCNICO AWS

Elevat.	Plan Sect.	Element Description
		AllWall Rib AW-COS.10/Z-220
		AllWall Rib AW-COS.10/Z-240

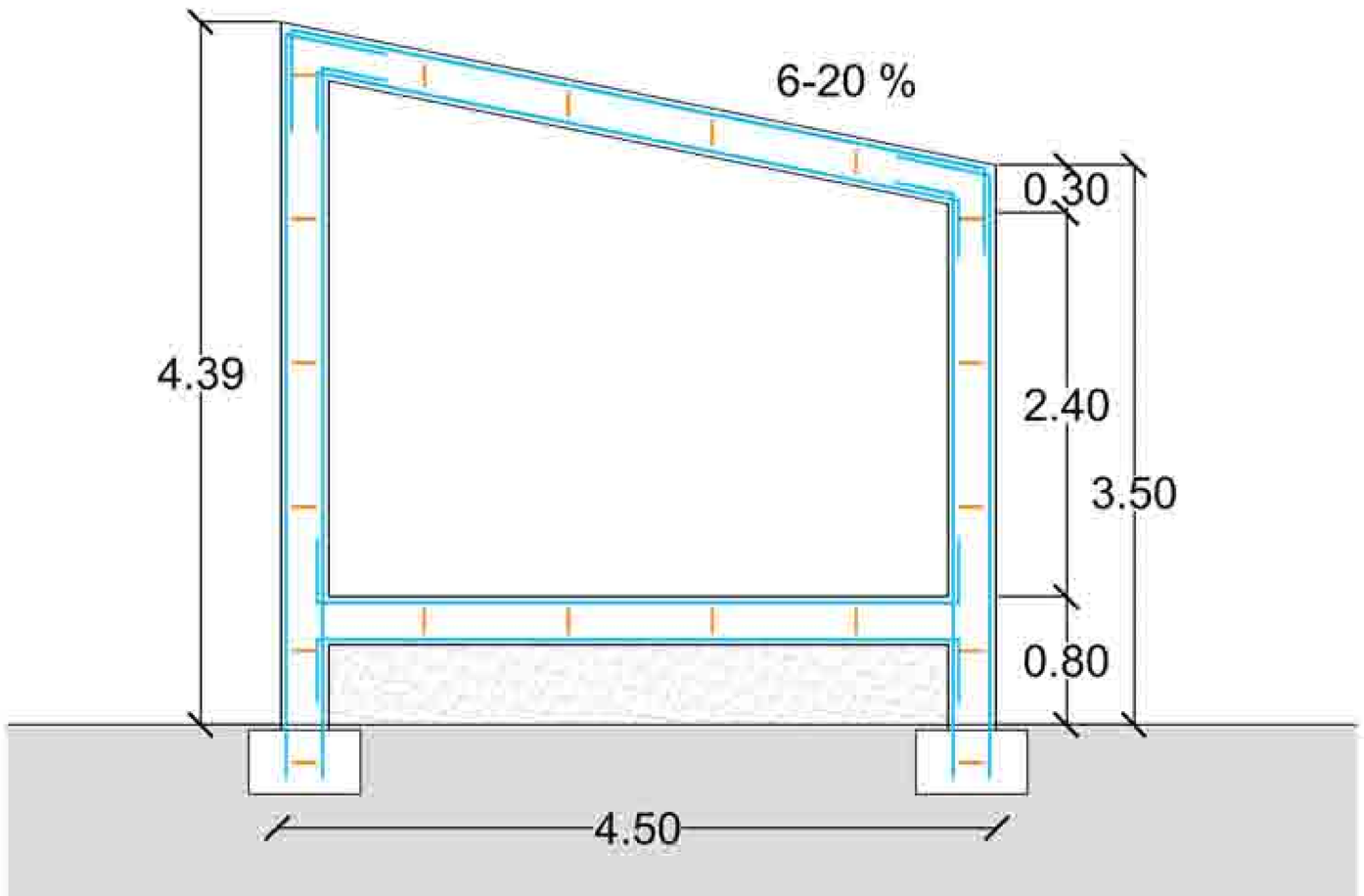

Modular housing 4:
- Strip footing
- Elevated slab (~50cm crawlspace)
- One sided roof

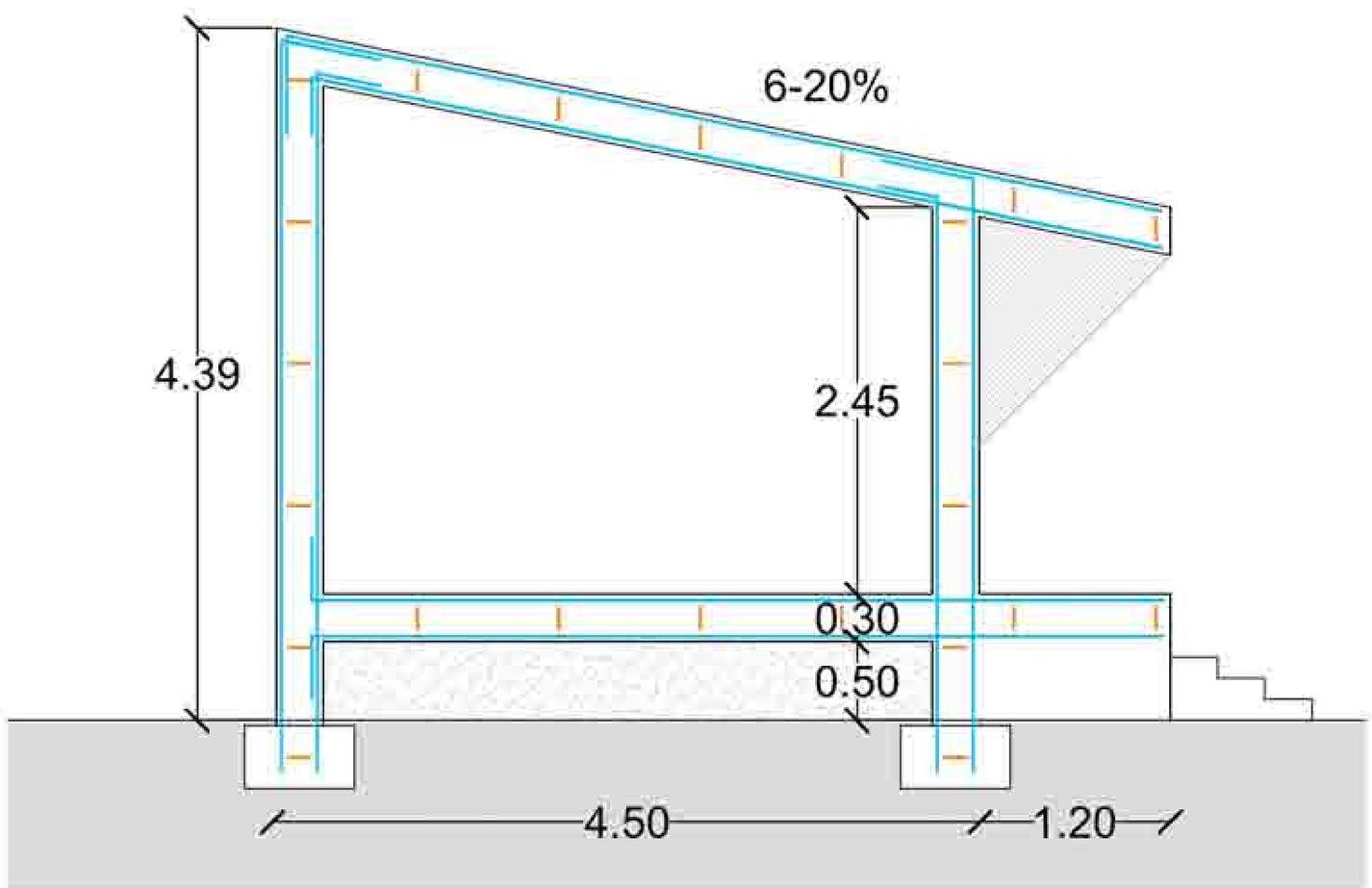

Modular housing 5:
- Elevated slab (~50cm crawlspace)
- One sided roof
- Exterior porch

Modular housing 6:
- Elevated slab (~50cm crawlspace)
- One sided roof
- Exterior porch
- Two spans/bays

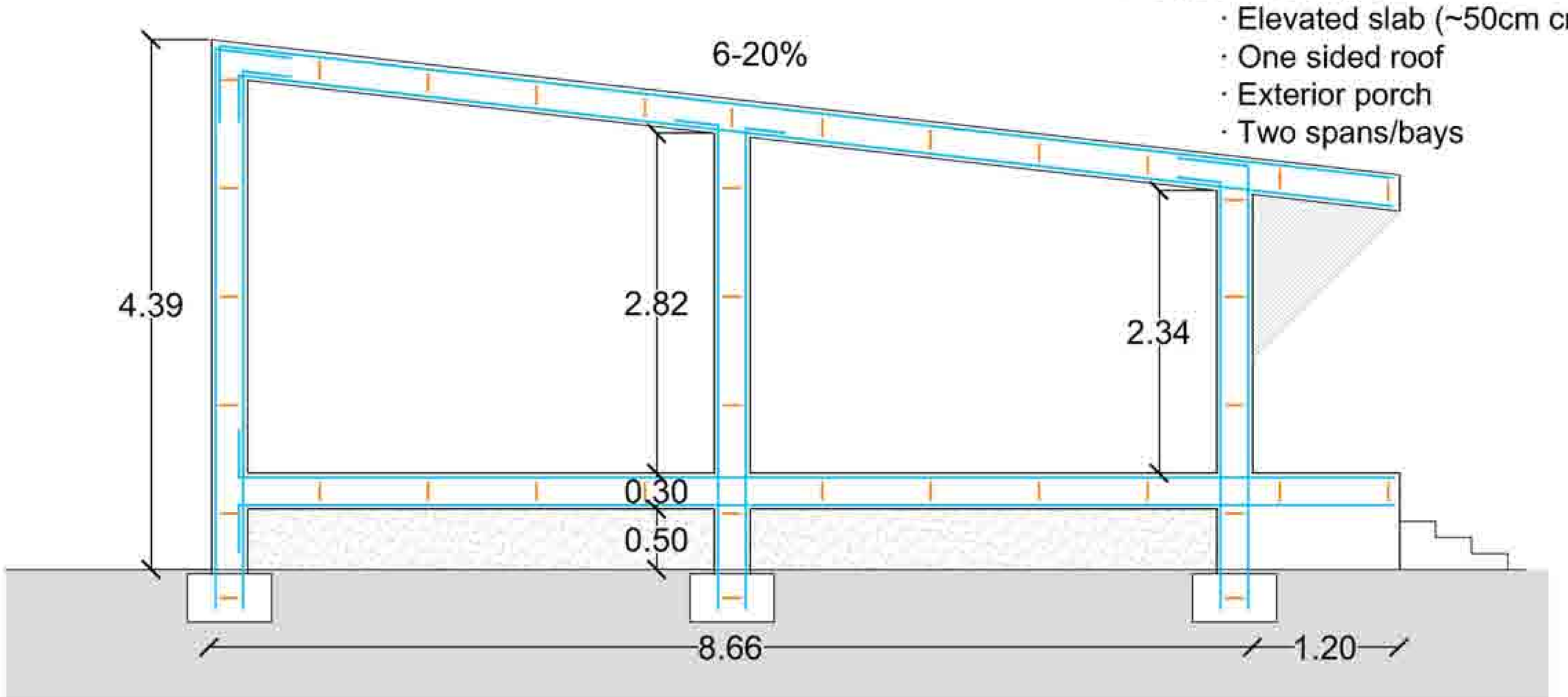

ALLWALL SYSTEMS S.L. Exclusive commercializer of the ALLWALL construction system.
C/ General Perón 3. 28020 Madrid. Tel: 91-556 81 93 E-mail: awsystems@telefonica.net